Category: SABFET **CIRCUIT IDEAS FOR DESIGNERS** Schematic no. sabfet_11106.0

ALD810028 Balances Three 2.7V Supercaps in Series

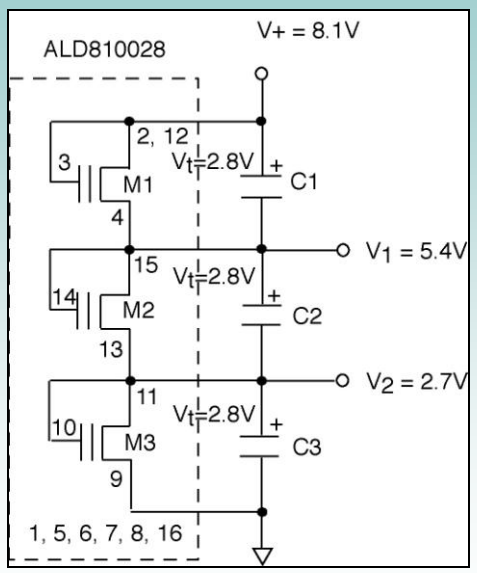

Description

Three supercaps connected in series are balanced using three MOSFETs of the quad supercapacitor auto balancing (SAB) MOSFET ALD810028. The ALD810028 has a threshold voltage, V_t, equal to 2.80 volts. When the gate-source voltage, V_{GS}, is equal to V_t, the I_{DS} ON current for each SAB MOSFET M1/M2/M3 is set at 1µA. The I_{DS} ON current of M1/M2/M3 change exponentially with slight changes in V_{GS}. Each SAB MOSFET M_X behaves like a voltage sensitive resistor (See sabfet_11101.0). At V_{GS} voltages below or above V_t, the SAB MOSFET I_{DS} ON current changes at a rate of approximately 1 decade for every 0.1V change in V_{GS}. In this example, the V_{GS} voltage of each SAB MOSFET M1/M2/M3 is set at approximately 2.7V, which has a nominal I_{DS} ON current of 0.1 µA. If the V_{GS} voltage for the ALD810028 falls below 2.2V, the I_{DS} current decreases to pA range, which is near zero compared to 1µA.

The voltages across M1/M2/M3 automatically self-adjust to accommodate different leakage currents for each supercap C1/C2/C3. V_1 and V_2 settle to approximately $^2/_3$ (V+) and $^1/_3$ (V+) respectively, depending upon relative leakage currents of each supercap in the stack. With V+ equal to 8.1V, V_1 is 5.4V and V_2 is 2.7V. The currents through M1/M2/M3 automatically compensate for different supercap voltages. A higher supercap voltage results in a higher corresponding V_{GS} voltage of M_X connected across it, at a higher I_{DS} ON current, which opposes the tendency for the higher supercap voltage to increase. A lower supercap voltage results in lower I_{DS} ON currents in the corresponding SAB MOSFET until I_{DS} ON ≈ 0. In equilibrium, the total leakage current across both M1/M2/M3 and C1/C2/C3 network is approximately equal to the highest leakage current of any one of C1/C2/C3.

Recommended Components

ALD810028

Other Related Circuit Ideas

Schematic no. sabfet_11102.0 Balancing 4-Supercap Cells in Series
Schematic no. sabfet_11103.0 Balancing 3-Supercap Cells in Series
Schematic no. sabfet_11110.0 ALD810026 Balances Four 2.5V Supercaps in Series