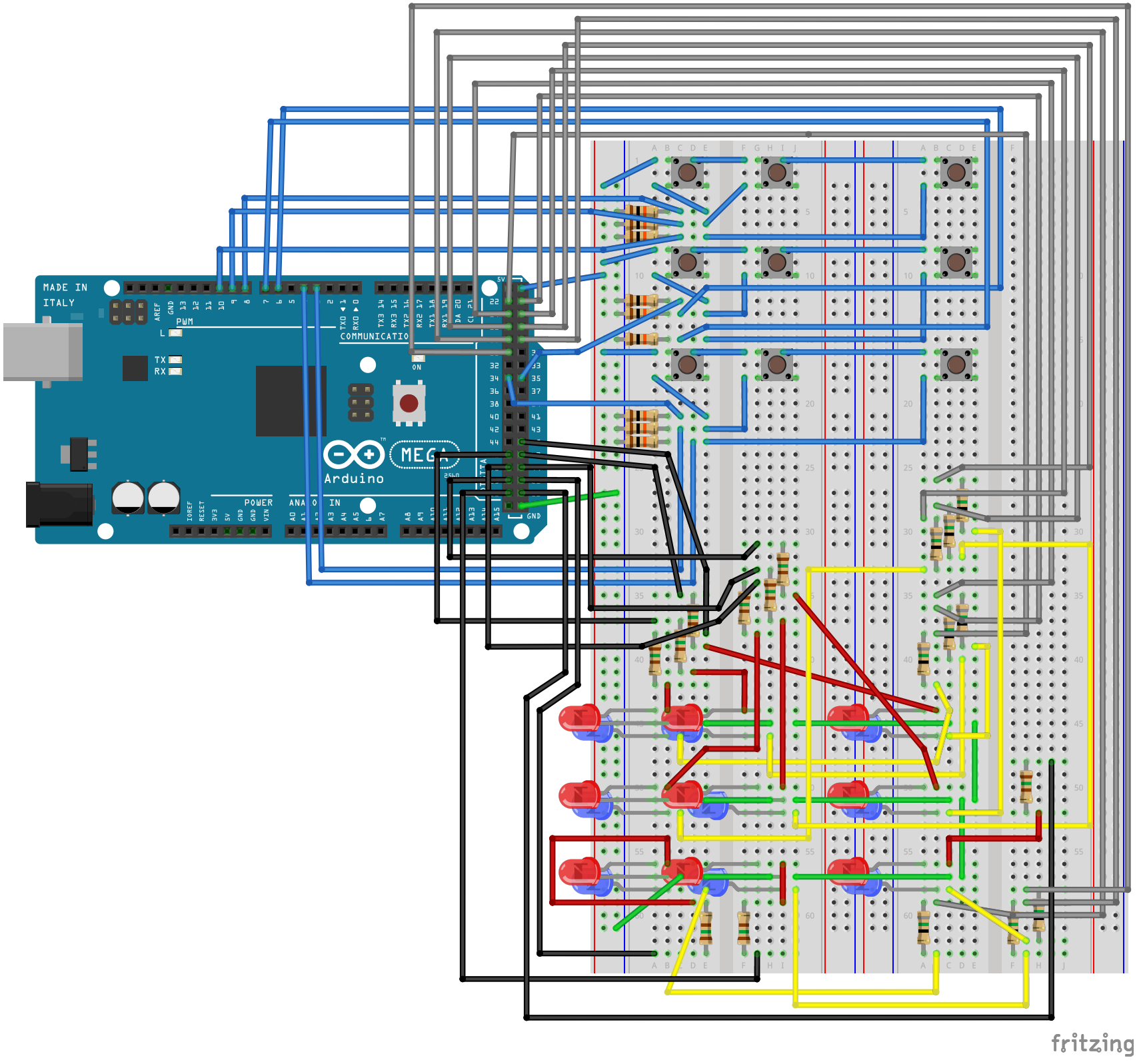
MADE IN
ITALY
PWM
COMMUNICATIO
TX
RX
ON
Arduino
MEGA
POWER
ANALOG IN
fritzing